AQUAFLEX 850L EXPANSION VESSEL

10AFM850

MODEL	10AFM850
NOMINAL VOLUME	850L
DESIGN PRESSURE	10 bar
PRE-CHARGE	4 bar
CONNECTION	2" BSP Female
MEMBRANE	EPDM
WEIGHT	178 kg

LABELS
A - SCHRADER VALVE
B - CONNECTION
C - GAUGE
D - MEMBRANE ANCHOR NUT

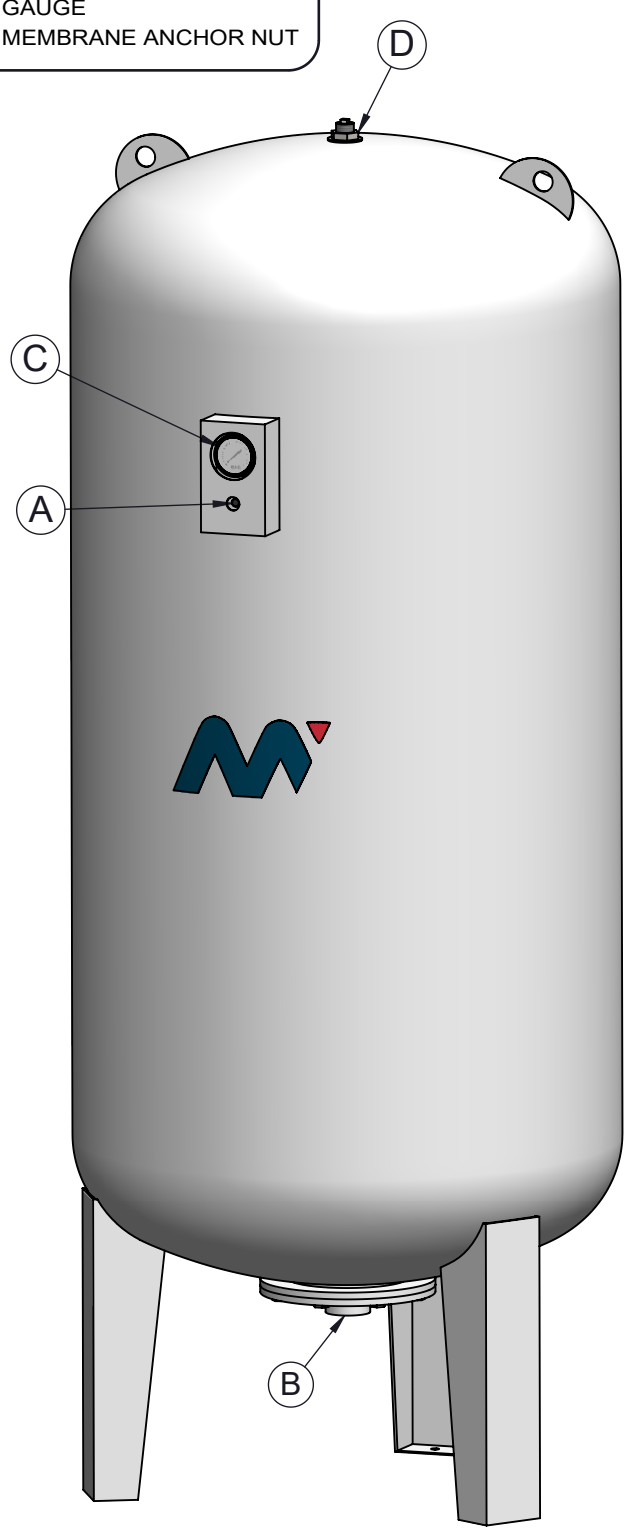

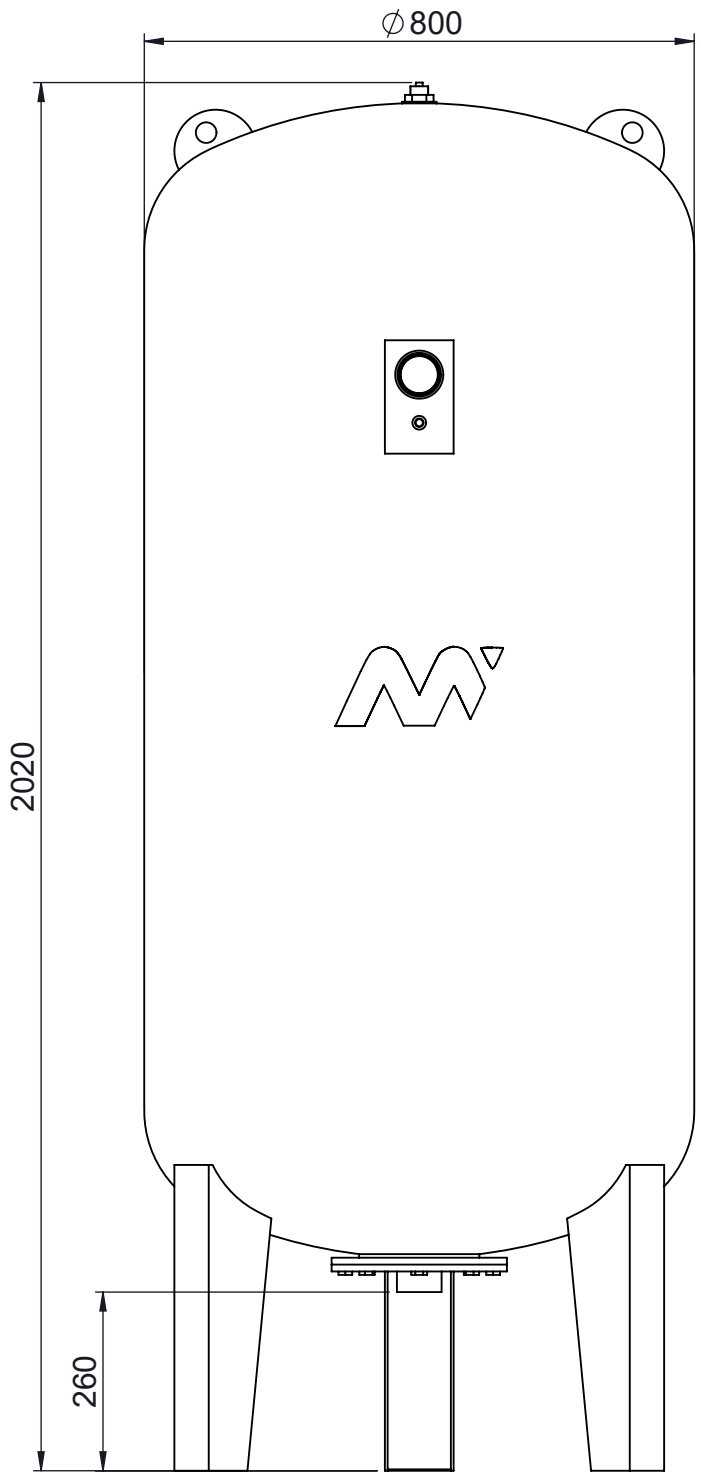

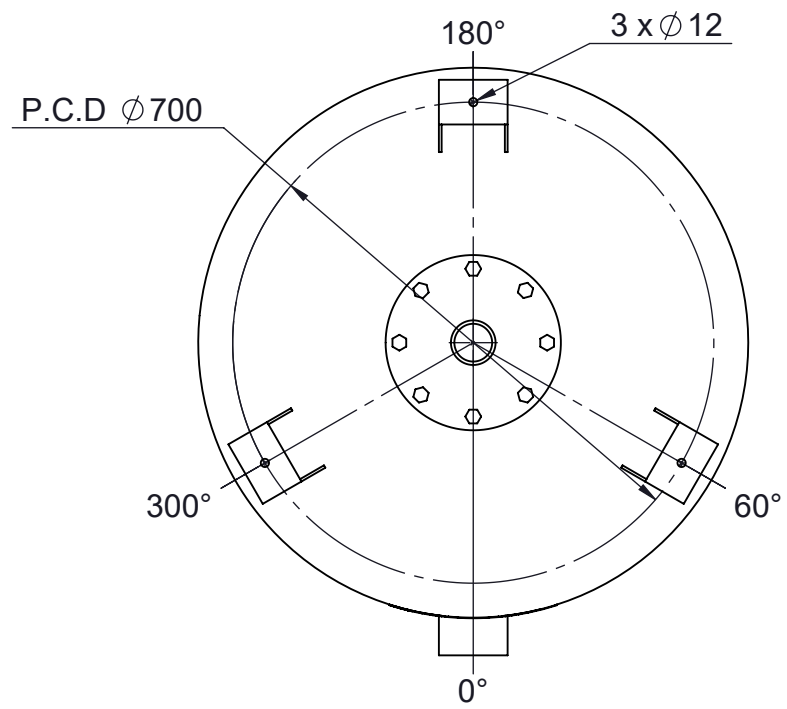

THIS DRAWING IS FOR REFERENCE ONLY I.E. NOT FOR CONSTRUCTION

NOTES MASTERFLOWSOLUTIONS PTY LTD RESERVES THE RIGHT TO AMEND THE DESIGN WITHOUT PRIOR NOTICE.	**DRAWN**	DN	30/09/2021	MASTERFLOW Call **+61 2 9748 2022** or visit **masterflow.net.au**
	CHECKED	AY	30/09/2021	
	APPROVED	RH	30/09/2021	
UNLESS OTHERWISE SPECIFIED 1. ALL DIMENSIONS ARE IN MM 2. TOLERANCES ± 10MM	**MATERIAL** MILD STEEL			TITLE **850L AQUAFLEX EXPANSION VESSEL**
PROPRIETY AND CONFIDENTIAL THE INFORMATION CONTAINED IN THIS DRAWING IS THE SOLE PROPERTY OF MASTERFLOW SOLUTIONS PTY LTD. ANY REPRODUCTION IN PART OF AS A WHOLE WITHOUT THE WRITTEN PERMISSION OF MASTERFLOW SOLUTIONS PTY LTD IS STRICTLY PROHIBITED.	**MAX WORKING PRESSURE** 10 bar			DWG NO **10AFM850** / REV **A**
	THIRD ANGLE PROJECTION			SIZE **A3** / SCALE **1:11** / PAGE **1 OF 1**